AUGMENTED REALITY

compatible with iOS devices

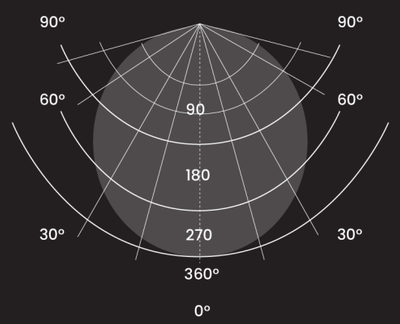

The 188-LED model is particularly suitable for industrial use for lighting during precision work such as quality control, control of printed circuit boards, and for mould making; in the graphic field for checking prints and lithographs and in the private sector for modelling, sewing, philately or reading.

188-**LED**

ACCESSORIES

S11

S12

S15

RL

Power	13.7 W
Supply	110-240 V
Illuminance at 50 cm	2.250 lux
Light Intensity Adjustment (Dimmer)	5-100 %
Dioptres - magnification power	3 - 1.75x
Colour Temperature	4.000 K
Reflector's diameter	230 mm
Diameter of the light field	700 mm
Product's life	50.000 hours
Colour rendering index (CRI)	94 Ra
Luminous flux	2200 lm
Structure	Reflector + Pantograph arm with spring
IP Protection	IP20
IK Protection	IK03
Class	III
Cabling	Plug-top transformer with AWG 2X21; plug type C (European - 2 pins) - upon request type G (British - 3 pins)
Fixing systems	S11, S12, S15, RL
Colours	Hammered Grey, Hammered White
Code	188-LED-GM, 188-LED-BM

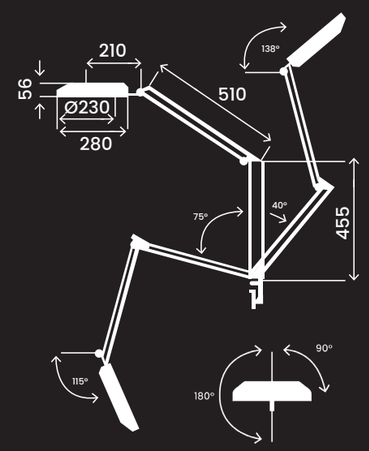

CODE

GM **188-LED-GM Hammered Grey**

BM **188-LED-BM Hammered White**

Ciclope Series