**Ciclope** Series

AUGMENTED REALITY

compatible with iOS devices







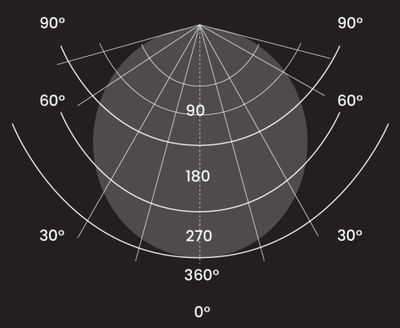

The 188-LED model is particularly suitable for industrial use for lighting during precision work such as quality control, control of printed circuit boards, and for mould making; in the graphic field for checking prints and lithographs and in the private sector for modelling, sewing, philately or reading.

# 188-**LED**

## ACCESSORIES

**S11**

**S12**

**S15**

**RL**

| | |
|---|---|
| **Power** | 13.7 W |
| **Supply** | 110-240 V |
| **Illuminance at 50 cm** | 2.250 lux |
| **Light Intensity Adjustment (Dimmer)** | 5-100 % |
| **Dioptres - magnification power** | 3 - 1.75x |
| **Colour Temperature** | 4.000 K |
| **Reflector's diameter** | 230 mm |
| **Diameter of the light field** | 700 mm |
| **Product's life** | 50.000 hours |
| **Colour rendering index (CRI)** | 94 Ra |
| **Luminous flux** | 2200 lm |
| **Structure** | Reflector + Pantograph arm with spring |
| **IP Protection** | IP20 |
| **IK Protection** | IK03 |
| **Class** | III |
| **Cabling** | Plug-top transformer with AWG 2X21; plug type C (European - 2 pins) - upon request type G (British - 3 pins) |
| **Fixing systems** | S11, S12, S15, RL |
| **Colours** | Hammered Grey, Hammered White |
| **Code** | 188-LED-GM, 188-LED-BM |

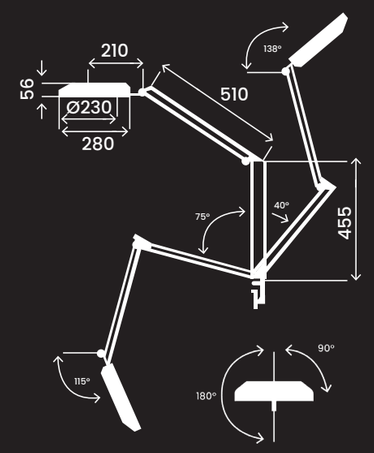


## CODE

**GM** **188-LED-GM Hammered Grey**

**BM** **188-LED-BM Hammered White**

CE

IK 03

IP 20

5000

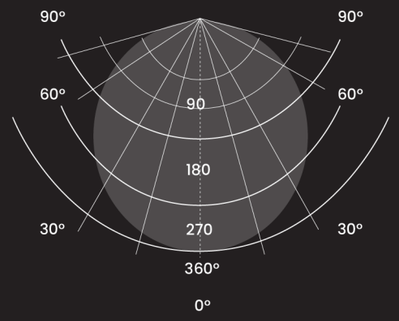

## ACCESSORIES

**S11**

**S12**

**S15**

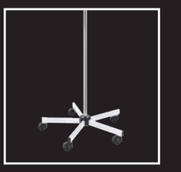

**RL**

**BASEPE**

| | |
|---|---|
| **Power** | 13.7 W |
| **Supply** | 110-240 V |
| **Illuminance at 50 cm** | 2.250 lux |
| **Light Intensity Adjustment (Dimmer)** | 5-100 % |
| **Dioptres - magnification power** | 3 - 1.75x |
| **Colour Temperature** | 4.000 K |
| **Reflector's diameter** | 230 mm |
| **Diameter of the light field** | 700 mm |
| **Product's life** | 50.000 hours |
| **Colour rendering index (CRI)** | 94 Ra |
| **Luminous flux** | 2200 lm |
| **Structure** | Reflector + Pantograph arm with spring |
| **IP Protection** | IP20 |
| **IK Protection** | IK03 |
| **Class** | III |
| **Cabling** | Plug-top transformer with AWG 2X21; plug type C (European - 2 pins) - upon request type G (British - 3 pins) |
| **Fixing systems** | S11, S12, S15, Desk base (Basepe), RL |
| **Colours** | Hammered Grey, Hammered White |
| **Code** | 198-LED-GM, 198-LED-BM |

This model is purposely designed to be used on desks. Despite the limited extension of the pantograph arm, its stability is guaranteed by ad-hoc engineered springs.

# 198-**LED**

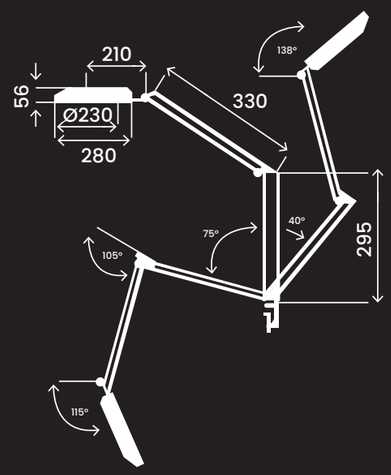


## CODE

**GM** **198-LED-GM**
**Hammered Grey**

**BM** **198-LED-BM**
**Hammered White**

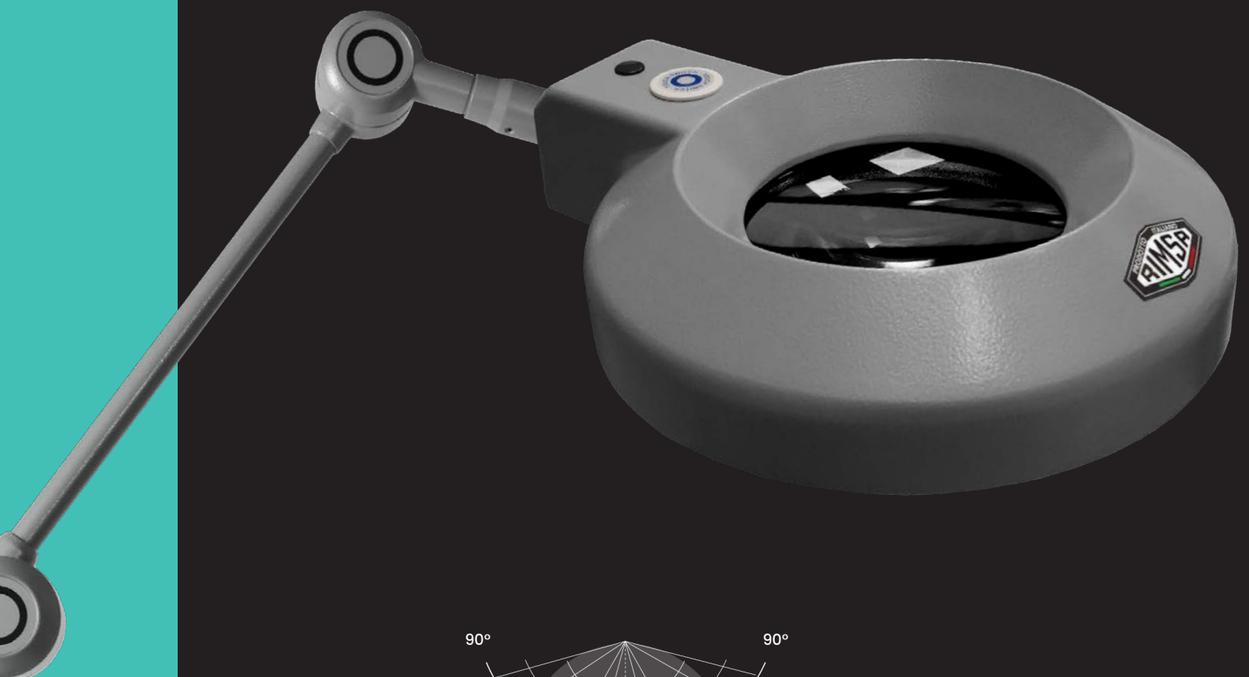

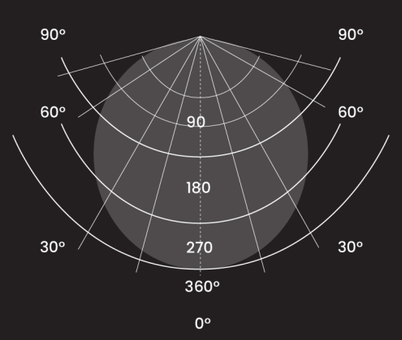


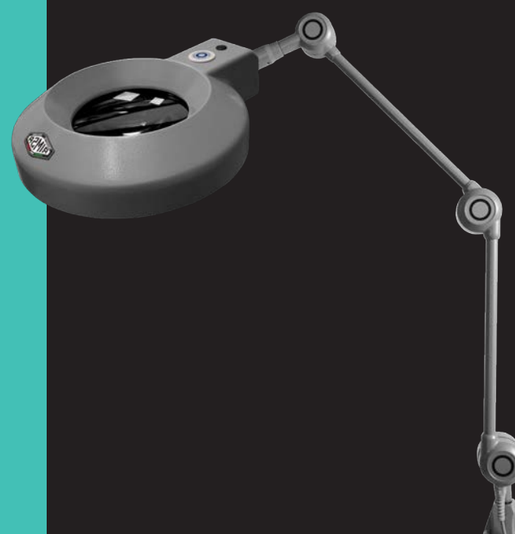

The special arm available on the L88-LED model allows for stability under strong vibrations. Because of its sturdiness, the product appears to be a very good companion in the industrial environment.

# L88-**LED**

## ACCESSORIES

**S11**

**S12MED**

**S15**

**RL**

| | |
|---|---|
| **Power** | 13.7 W |
| **Supply** | 110-240 V |
| **Illuminance at 50 cm** | 2.250 lux |
| **Light Intensity Adjustment (Dimmer)** | 5-100 % |
| **Dioptres - magnification power** | 3 - 1.75x |
| **Colour Temperature** | 4.000 K |
| **Reflector's diameter** | 230 mm |
| **Diameter of the light field** | 700 mm |
| **Product's life** | 50.000 hours |
| **Colour rendering index (CRI)** | 94 Ra |
| **Luminous flux** | 2200 lm |
| **Structure** | Reflector+ 3 Joints |
| **IP Protection** | IP20 |
| **IK Protection** | IK03 |
| **Class** | III |
| **Cabling** | Plug-top transformer with AWG 2X21; plug type C (European - 2 pins) - upon request type G (British - 3 pins) |
| **Fixing systems** | S11, S12MED, S15, RL |
| **Colours** | Hammered Grey, Hammered White |
| **Code** | L88-LED-GM, L88-LED-BM |

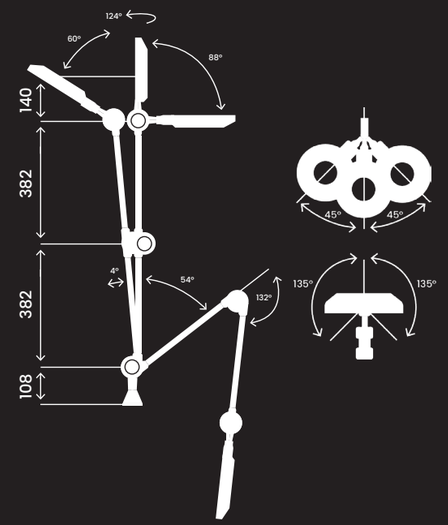


## CODE

**GM** **L88-LED-GM Hammered Grey**

**BM** **L88-LED-BM Hammered White**

IK 03

IP 20

5000

Ciclope Series