CODE

GM **176-LED-GM**
Hammered grey

BM **176-LED-BM**
Hammered white

Given the reduced dimensions of the arms, the product is particularly suited to be used on tables.
The industrial design of the product offers a stylish touch on any office desk.

176-LED

ACCESSORIES

S11

S12

S15

RL

BASEPE

KITB24RL

Power	13.7 W
Supply	110-240 V
Illuminance at 50cm	1.800 lux
Light intensity adjustment (Dimmer)	5% - 100%
Colour temperature	4.000 K
Reflector's length	400 mm
Diameter of the light field	700 x 650 mm
Product's life	60.000 hours
Colour Rendering Index (CRI)	94 Ra
Luminous flux	2.200 lm
Structure	Reflector + pantograph arm with spring
IP Protection	IP20
IK Protection	IK05
Class	III
Cabling	Plug-top transformer with AWG 2X21; plug type C (European - 2 pins) - upon request type G (British - 3 pins)
Fixing systems	S11, S12, S15, RL, Desk base (Basepe)
Colours	Hammered grey, Hammered white
Code	176-LED-GM, 176-LED-BM

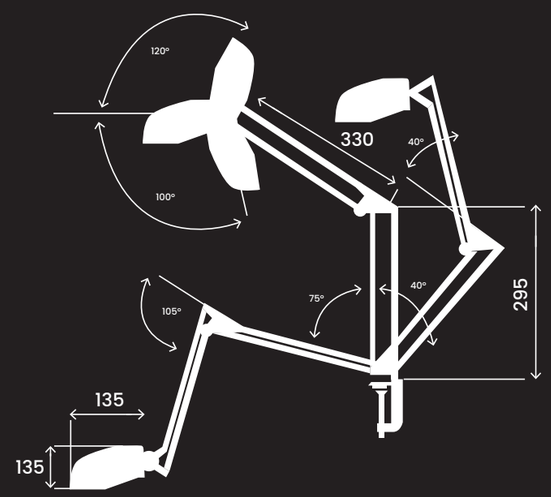

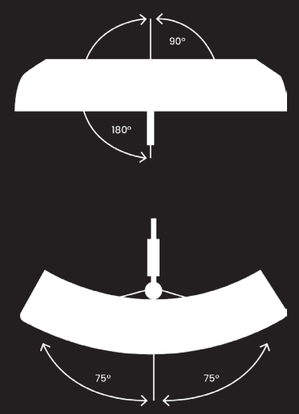

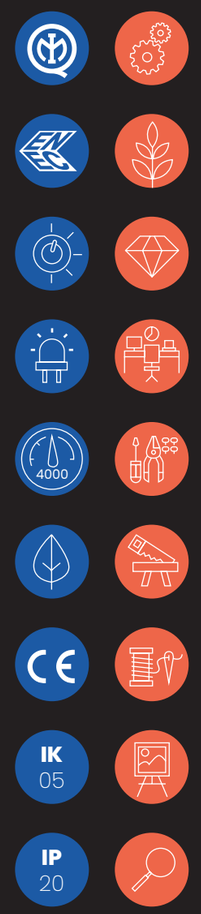

Diana Series